MURO: M11

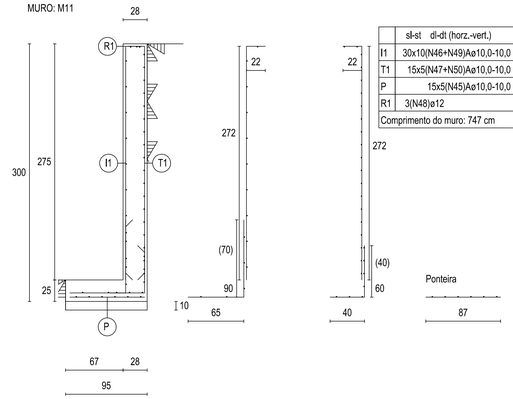

	sl-st dl-dt (horz.-vert.)		
I1	30x10(N46+N49)Aø10,0-10,0	CA-50	5098 Kg/cm2
T1	15x5(N47+N50)Aø10,0-10,0	CA-50	5098 Kg/cm2
P	15x5(N45)Aø10,0-10,0	CA-50	5098 Kg/cm2
R1	3(N48)ø12		
Comprimento do muro: 747 cm			

MURO: M12

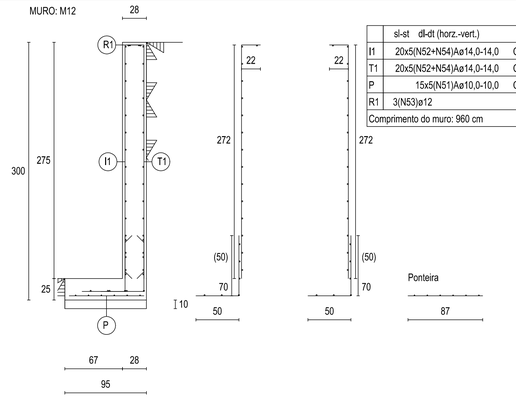

	sl-st dl-dt (horz.-vert.)		
I1	20x5(N52+N54)Aø14,0-14,0	CA-50	5098 Kg/cm2
T1	20x5(N52+N54)Aø14,0-14,0	CA-50	5098 Kg/cm2
P	15x5(N51)Aø10,0-10,0	CA-50	5098 Kg/cm2
R1	3(N53)ø12		
Comprimento do muro: 960 cm			

MURO: M13

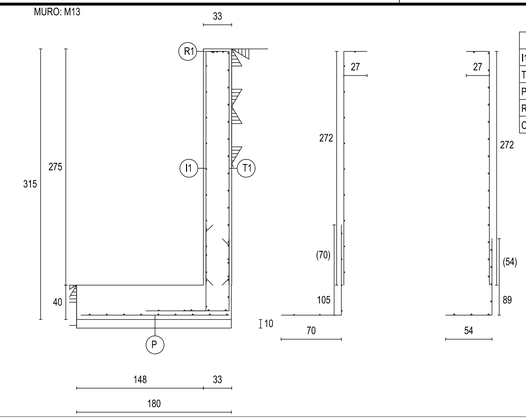

	sl-st dl-dt (horz.-vert.)		
I1	30x10(N56+N59)Aø10,0-10,0	CA-50	5098 Kg/cm2
T1	20x5(N57+N60)Aø16,0-16,0	CA-50	5098 Kg/cm2
P	20x5(N55)Aø14,0-14,0	CA-50	5098 Kg/cm2
R1	3(N58)ø12		
Comprimento do muro: 110 cm			

MURO: M14

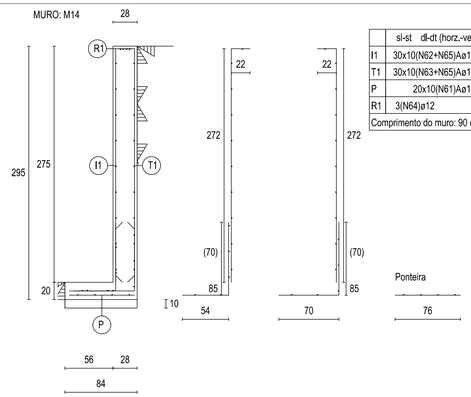

	sl-st dl-dt (horz.-vert.)		
I1	30x10(N62+N65)Aø10,0-10,0	CA-50	5098 Kg/cm2
T1	30x10(N63+N65)Aø10,0-10,0	CA-50	5098 Kg/cm2
P	20x10(N61)Aø10,0-10,0	CA-50	5098 Kg/cm2
R1	3(N64)ø12		
Comprimento do muro: 90 cm			

MURO: M15

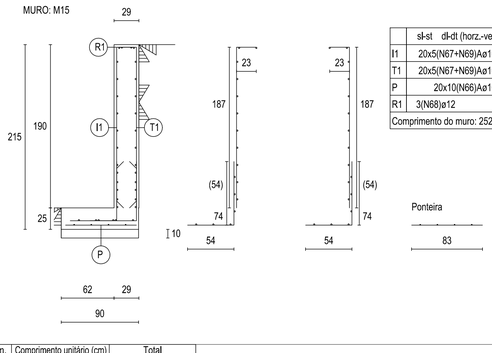

	sl-st dl-dt (horz.-vert.)		
I1	20x5(N67+N69)Aø16,0-16,0	CA-50	5098 Kg/cm2
T1	20x5(N67+N69)Aø16,0-16,0	CA-50	5098 Kg/cm2
P	20x10(N66)Aø10,0-10,0	CA-50	5098 Kg/cm2
R1	3(N68)ø12		
Comprimento do muro: 2520 cm			

MURO: M16

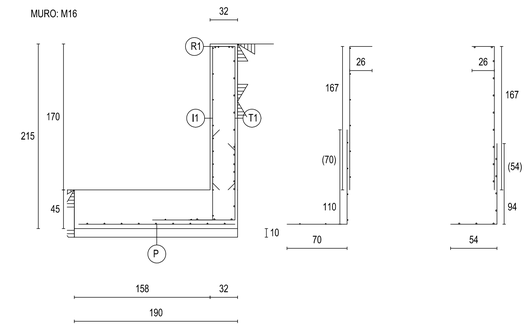

	sl-st dl-dt (horz.-vert.)		
I1	30x10(N71+N74)Aø10,0-10,0	CA-50	5098 Kg/cm2
T1	20x5(N72+N75)Aø16,0-16,0	CA-50	5098 Kg/cm2
P	20x5(N70)Aø14,0-14,0	CA-50	5098 Kg/cm2
R1	3(N73)ø12		
Comprimento do muro: 251 cm			

MURO: M17

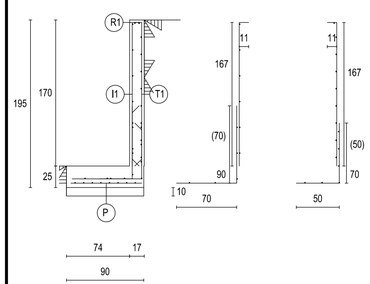

	sl-st dl-dt (horz.-vert.)		
I1	30x10(N80)Aø10,0-10,0	CA-50	5098 Kg/cm2
T1	20x5(N78+N81)Aø11,5-11,5	CA-50	5098 Kg/cm2
P	10x5(N76)Aø10,0-10,0	CA-50	5098 Kg/cm2
R1	3(N79)ø12		
Comprimento do muro: 230 cm			

MURO: M18

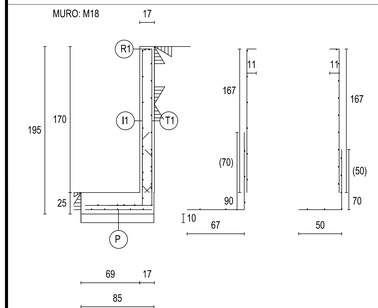

	sl-st dl-dt (horz.-vert.)		
I1	30x20(N83+N86)Aø10,0-10,0	CA-50	5098 Kg/cm2
T1	20x5(N84+N87)Aø10,5-10,5	CA-50	5098 Kg/cm2
P	15x5(N82)Aø10,0-10,0	CA-50	5098 Kg/cm2
R1	3(N85)ø12		
Comprimento do muro: 220 cm			

Muro	ID	Qt.	Diâm.	Comprimento unitário (cm) P	C. Reto	P	C. Total	Total (cm)		(kg)
Muros de arrimo-cortinas								Aço CA-50 N 5098 Kg/cm2		
Muro M1	1	1	ø10,0		1020		1020			52,352
			ø10,0		76		76			
	2	1	ø10,0		1024		1024			122,787
			ø10,0	85	54		139			
	3	1	ø10,0		1024		1024			133,171
			ø10,0	85	70		155			
	4	3	ø12		1024		1024	3072		28,146
	5	2	ø10,0		1024		1024			511,916
			ø10,0	22	272		294			
							Total+10,0%			933,210
Muro M6	6	1	ø10,0		1020		1020			68,793
			ø10,0		76		76			
	7	1	ø10,0		1024		1024			122,787
			ø10,0	85	54		139			
	8	1	ø10,0		1024		1024			133,171
			ø10,0	85	70		155			
	9	3	ø12		1024		1024	3072		28,146
	10	2	ø10,0		1024		1024			511,916
			ø10,0	22	272		294			
							Total+10,0%			951,295
Muro M7	11	1	ø11,5		241		241			71,549
			ø11,5		142		142			
	12	1	ø10,0		245		245			36,394
			ø10,0	100	70		170			
	13	1	ø16,0		245		245			143,664
			ø16,0	90	60		150			
	14	3	ø12		245		245	735		6,734
	15	1	ø10,0		245		245			50,647
			ø10,0		240		240			
	16	2	ø10,0		245		245			124,708
			ø10,0	22	272		294			
	17	1	ø16,0		245		245			219,487
			ø16,0		230		230			
							Total+10,0%			718,501
Muro M8	18	1	ø10,0		360		360			23,059
			ø10,0		76		76			
	19	1	ø10,0		364		364			43,419
			ø10,0	85	54		139			
	20	1	ø10,0		364		364			47,084
			ø10,0	85	70		155			
	21	3	ø12		364		364	1092		10,005
	22	2	ø10,0		364		364			181,005
			ø10,0	22	272		294			
							Total+10,0%			335,030
Muro M5	23	1	ø10,0		702		702			47,249
			ø10,0		76		76			
	24	1	ø10,0		706		706			85,253
			ø10,0	85	54		139			
	25	1	ø10,0		706		706			92,481
			ø10,0	85	70		155			
	26	3	ø12		706		706	2118		19,406
	27	2	ø10,0		706		706			355,470
			ø10,0	22	272		294			
							Total+10,0%			659,845
Muro M4	28	1	ø10,0		626		626			97,069
			ø10,0		92		92			
	29	1	ø10,0		630		630			84,178
			ø10,0	90	70		160			
	30	1	ø10,0		630		630			108,229
			ø10,0	60	40		100			
	31	3	ø12		630		630	1890		17,317
	32	1	ø10,0		630		630			157,934
			ø10,0	22	272		294			
	33	1	ø10,0		630		630			315,869
			ø10,0	22	272		294			
							Total+10,0%			858,657
Muro M9	34	1	ø10,0		90		90			6,070
			ø10,0		76		76			
	35	1	ø10,0		94		94			10,950
			ø10,0	85	54		139			
	36	1	ø10,0		94		94			11,866
			ø10,0	85	70		155			
	37	3	ø12		94		94	282		2,584
	38	2	ø10,0		94		94			45,633
			ø10,0	22	272		294			
							Total+10,0%			84,813
Muro M10	39	1	ø12,0		100		100			39,947
			ø12,0		173		173			
	40	1	ø10,0		104		104			15,423
			ø10,0	110	70		180			
	41	1	ø16,0		104		104			62,482
			ø16,0	94	54		148			
	42	3	ø12		104		104	312		2,859
	43	1	ø10,0		104		104			25,641
			ø10,0	27	272		299			
	44	1	ø16,0		104		104			127,685
			ø16,0	27	272		299			
							Total+10,0%			301,441
Muro M11	45	1	ø10,0		737		737			109,508
			ø10,0		87		87			
	46	1	ø10,0		741		741			96,554
			ø10,0	90	65		155			
	47	1	ø10,0		741		741			127,171
			ø10,0	60	40		100			
	48	3	ø12		741		741	2223		20,368
	49	1	ø10,0		741		741			185,573
			ø10,0	22	272		294			
	50	1	ø10,0		741		741			371,148
			ø10,0	22	272		294			
							Total+10,0%			1001,355
Muro M12	51	1	ø10,0		950		950			141,442
			ø10,0		87		87			
	52	2	ø14,0		954		954			714,429
			ø14,0	70	50		120			
	53	3	ø12		954		954	2862		26,222
	54	2	ø14,0		954		954			1757,490
			ø14,0	22	272		294			
							Total+10,0%			2903,543
Muro M13	55	1	ø14,0		100		100			54,373
			ø14,0		173		173			
	56	1	ø10,0		104		104			15,105
			ø10,0	105	70		175			
	57	1	ø16,0		104		104			60,772
			ø16,0	89	54		143			
	58	3	ø12		104		104	312		2,859
	59	1	ø10,0		104		104			25,641
			ø10,0	27	272		299			
	60	1	ø16,0		104		104			127,685
			ø16,0	27	272		299			
							Total+10,0%			315,079
Muro M14	61	1	ø10,0		80		80			5,905
			ø10,0		76		76			
	62	1	ø10,0		84		84			9,747
			ø10,0	85	54		139			
	63	1	ø10,0		84		84			10,562
			ø10,0	85	70		155			
	64	3	ø12		84		84	252		2,309
	65	2	ø10,0		84		84			40,619
			ø10,0	22	272		294			
							Total+10,0%			76,057
Muro M15	66	1	ø10,0		2510		2510			196,435
			ø10,0		83		83			
	67	2	ø16,0		2514		2514			2588,820
			ø16,0	74	54		128			
	68	3	ø12		2514		2514	7542		69,102
	69	2	ø16,0		2514		2514			4341,977
			ø16,0	23	187		210			
							Total+10,0%			7915,967
Muro M16	70	1	ø14,0		241		241			135,994
			ø14,0		182		182			
	71	1	ø10,0		245		245			37,985
			ø10,0	110	70		180			
	72	1	ø16,0		245		245			146,059
			ø16,0	94	54		148			
	73	3	ø12		245		245	735		6,734
	74	1	ø10,0		245		245			40,053
			ø10,0	26	167		193			
	75	1	ø16,0		245		245			193,947
			ø16,0	26	167		193			
							Total+10,0%			616,849
Muro M17	76	1	ø10,0		220		220			34,434
			ø10,0		83		83			
	77	1	ø10,0		224		224			29,523
			ø10,0	90	70		160			
	78	1	ø11,5		224		224			56,748
			ø11,5	70	50		120			
	79	3	ø12		224		224	672		6,157
	80	1	ø10,0		224		224			33,467
			ø10,0	11	167		178			
	81	1	ø11,5		224		224			84,365
			ø11,5	11	167		178			
							Total+10,0%			269,165
Muro M18	82	1	ø10,0		210		210			27,525
			ø10,0		78		78			
	83	1	ø10,0		214		214			17,796
			ø10,0	90	67		157			
	84	1	ø10,5		214		214			45,204
			ø10,5	70	50		120			
	85	3	ø12		214		214	642		5,882
	86	1	ø10,0		214		214			20,628
			ø10,0	11	167		178			
	87	1	ø10,5		214		214			67,203
			ø10,5	11	167		178			
							Total+10,0%			202,662

Total+10,0% (kg)	
Aço CA-50 N 5098 Kg/cm2	
ø12	280,314
ø10,0	5719,284
ø10,5	123,648
ø11,5	233,928
ø12,0	43,942
ø14,0	2928,516
ø16,0	8813,837
Total	18143,469

NOTAS

1 – DIMENSÕES EM CENTIMETROS, ELEVAÇÕES EM METROS, EXCETO ONDE INDICADO

2 – CONCRETO FCK 30MPA

REVISÃO	DETALHADOS	DATA	VISTO
00	INICIAL	09/01/12	

GELFUS
GERENCIAMENTO, PROJETOS E ASSESSORIA DE OBRAS
ENGº ALEXANDRE ROGÉRIO GAINO
Fone/Fax: (19) 3542 2357
Site: www.gelfus.com.br
Email: contato@gelfus.com.br

OBRA :
CONSTRUÇÃO DE EDIFÍCIOS ADMINISTRATIVO
NA CÂMARA MUNICIPAL DE LIMEIRA

CLIENTE :
CÂMARA MUNICIPAL DE LIMEIRA

DETALHADOS :
DETALHES DAS ARMADURAS
SAPATAS E MUROS DE ARRIMO (02/02)

PROJ. TÉCNICO:	DATA:	PROJETO:
ARGAINO	09 / 01 / 2012	ESTRUTURAL
ESCALAS: 1 : 30	REVISÃO: 00	FOLHA: 14 / 36
DESENHISTA: LÍVIA GOUVEIA	ARQUIVO: 132-D-556-16-002_1	

ESTE PROJETO É PROPRIEDADE INTELECTUAL DE SEUS AUTORES, PODENDO SER UTILIZADO SOMENTE DE ACORDO COM OS LIMITES CONTRATUAIS. PORTANTO É VETADA SUA UTILIZAÇÃO EM PARTE OU NO TODO SEM EXPRESSA AUTORIZAÇÃO DOS MESMOS.

DESENHO ELABORADO EM ZWCAD